HOME GLIDE

USER MANUAL

ACCESS

© TK Home Solutions B.V. All rights reserved.

Specifications and illustrations are subject to change without prior notice.
TK Home Solutions B.V. will not accept liability for any alteration or typing error.

Subject to the exceptions provided by law, this publication and/or its contents may not be, whether entirely or partly, reproduced, copied, and/or published in print, by photocopying, on microfilm, electronically or in any other way without the prior written consent of TK Home Solutions B.V.

TABLE OF CONTENTS

1 Introduction 1

1.1 Manual 1
1.2 Symbols 1
1.3 Intended use 1

2 Safety 2

2.1 Safety warnings 2

3 Description 5

3.1 Stairlift 5
3.2 Controls 6
3.3 Swivel seat 12
3.4 Optional features 13

4 Use 15

4.1 Unfolding the seat and sitting down 16
4.2 Travelling with the stairlift 16
4.3 Emergency stop 17
4.4 Communication Module (optional) 17
4.5 Standing up and folding the seat 21

5 Maintenance 22

5.1 Cleaning the stairlift 22
5.2 Regular maintenance 22
5.3 Replacing the batteries of the call-and-send controls 22

6 Signals 23

6.1 Signals on armrest control unit 23

7 Technical data 24

8 Contact 26

1 INTRODUCTION

1.1 MANUAL

The manual describes all equipment that is available for the HomeGlide stairlift. Not all features may be available for the model installed in your home. Illustrations may differ from the model installed in your home.

The terms “left”, “right”, “front” and “rear” are used to identify specific parts of the stairlift. The reference point is always your position as user, sitting on the stairlift.

The terms “parking point” and “charging point” commonly refer to the same point. When the action of parking is referred to, the term “parking point” is used. When the action of charging is referred to, the term “charging point” is used.

1.2 SYMBOLS

WARNING

“WARNING” means that a (fatal) injury is possible if the instructions are not obeyed.

CAUTION

“CAUTION” means that damage to equipment is possible if the instructions are not obeyed.

NOTE

“NOTE” is used to give additional information.

1.3 INTENDED USE

The stairlift has been designed to transport one person up and down the stairs. The stairlift can only be used for straight stairs.

The stairlift operates with an electric motor that is powered by rechargeable batteries in the motor housing. The batteries are charged at the charging points at the top and bottom of the stairs. As an option, the batteries can also be charged at any additional charging point.

- While you are seated on the stairlift, use the armrest control unit in one of the armrests.
- If the stairlift is not in the required place, use the call-and-send controls at the top and bottom of the stairs.

2 SAFETY

2.1 SAFETY WARNINGS

TK Home Solutions B.V. is not responsible for injury or damage caused by not obeying the safety warnings in the manual.

2.1.1 USER

- Before you use the stairlift, read the manual carefully. Only use the stairlift if you know and understand the safety warnings and the operating instructions.
- An authorised technician will demonstrate how the stairlift operates. Do not hesitate to ask the technician all your questions. Before you use the stairlift, make sure that you understand all procedures.
- Keep the manual near the stairlift for easy reference. Save the phone number of the service centre in or near your phone.
- The stairlift is only intended for use by adults who have fully read and understood the manual.
- Minors and users with an intellectual disability can only use the stairlift under supervision.
- Keep children away from the stairlift. Do not let children play with the stairlift.
- In case of existing child-stair-fence: please check if fence is still operative.
- Do not use the stairlift for the transport of more than one person at the same time.
- Do not use the stairlift when your weight is more than the maximum permitted weight: see chapter 7.
- Make sure you carry a call device with you when using the stairlift.
- Make sure that there is enough illumination at the surroundings of the halt points for safe step-on and step-off the stairlift.
- Do not stand on the footrest when getting on or of the stairlift.
- Keep the mains cable connected to the wall outlet to make sure that the batteries remain charged and the stairlift is ready for use.
- Do not use the Outdoor stairlift in bad weather conditions which can cause lightning.
- In case of any malfunction of the stairlift, please contact a service technican.

2.1.2 STAIRS AND STAIRLIFT

- Do not use the stairlift in case there are any other persons on the stairs.
- Do not use the stairlift in case of fire or near explosive materials.
- Keep water and moisture away from the stairlift.
- Do not use the stairlift to transport animals. Keep animals away from the stairs and the stairlift.
- Do not use the stairlift to transport goods. Keep goods away from the stairs and the stairlift.
- Before use, inspect the stairs and the stairlift. Only use the stairlift when the stairs are free of obstacles. Make sure that there are no obstacles on the rail.
- Make sure that loose clothing cannot become caught in the moving parts of the stairlift.
- Do not stand on the footrest. Always sit on the seat.
- Always wear the safety belt.
- Remain seated upright during the ride. Do not lean back or forward. Do not make any unnecessary movements.
- Keep your arms and hands on the armrests.
- Keep your feet on the footrest. Do not let your feet protrude outside the footrest.
- Do not get off the stairlift on the stairs, not even in case of a breakdown. Only get off the stairlift at floor positions.
- Carefully fold or unfold any parts of the stairlift.
- In case of a breakdown, use the Communication Module (optional), or call device to contact a caretaker.
- Do not physically force the stairlift to start moving.
- Park the stairlift at a parking point to make sure that the batteries remain charged. The stairlift stops when it arrives at a parking point. If you do not park the stairlift at a parking point, a continuous sound indicates that the batteries can become empty.
- Report unusual sounds or vibration to your supplier immediately.
- In case of an emergency, press the emergency stop button in the joystick user interface. The stairlift will not operate when the emergency stop button is activated. Only de-activate the emergency stop button when the dangerous situation has been resolved.
- Keep the mains cable connected to the wall outlet to make sure that the batteries remain charged and the stairlift is ready for use.

2.1.3 MAINTENANCE

- Only carry out maintenance which is described in the manual. Refer to chapter 5 “Maintenance”.
- An authorised technician must carry out maintenance and repair which is not described in the manual.
- Do not disassemble or repair the stairlift yourself. Have stairlift parts repaired and replaced by an authorised technician.
- Do not modify the stairlift in any way. The performance of substantial modifications may result in the stairlift being outside the scope of the type approval certificate, so that the declaration of conformity and the CE marking will be no longer valid.
- Do not remove stickers, labels, data plates and warning plates from the stairlift.
- If you think that the stairlift has a defect which can cause (fatal) injury, do not use the stairlift and immediately contact your supplier.
- For North America: Do regular tests and inspections according to “ASME A18.1 - 2020: Safety Standard for Platform Lifts and Stairway Chairlifts”.

3 DESCRIPTION

3.1 STAIRLIFT

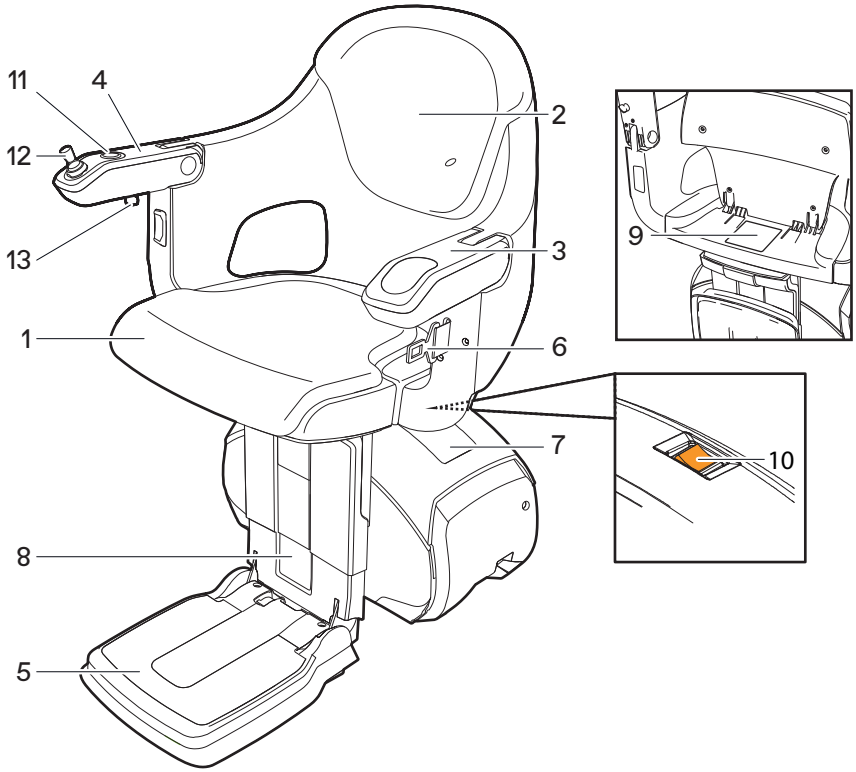

1. Seat
2. Backrest
3. Armrest
4. Armrest control unit
   (Refer to section 3.2.1 “Armrest control unit”)
5. Footrest
6. Safety belt
7. Motor housing
8. Warning plate
9. Date plate
10. Main switch
11. Emergency stop button
12. Joystick
13. Key lock

3.2 CONTROLS

3.2.1 ARMREST CONTROL UNIT

Use the armrest control unit (Joystick) to move the stairlift while you are seated in the chair. The armrest control unit (Joystick) is mounted on the armrest that is closest to the bottom of the stairs.

NOTE

- The armrest control unit can be moved to the opposite side if more convenient to the user.
- The armrest should be unfolded to gain control.

3.2.1.1 HOMEGLIDE CLASSIC / HOMEGLIDE EXTRA / HOMEGLIDE OUTDOOR

14. Key switch (Extra/Outdoor)
15. Key (Extra/Outdoor)
16. Joystick

- Insert the key into the key switch.
- Switch on the stairlift using the key switch (see 3.2.3 for full details).
- Fasten the safety belt.
- Push and hold the joystick to the left or to the right to move the stairlift.
- Release the joystick to stop the stairlift
- Release the safety belt.

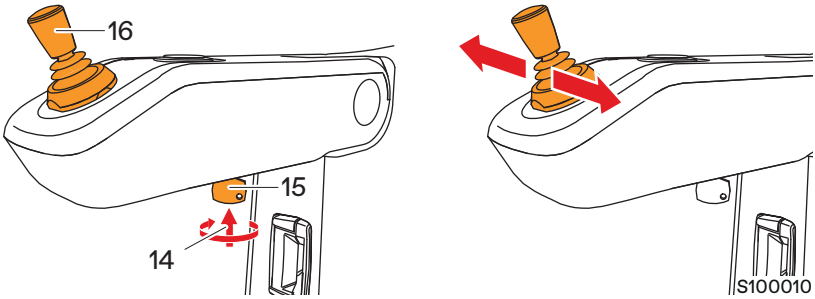

WARNING

- Release the safety belt in a controlled way. The metal tongue of the safety belt can hit the user when released uncontrolled.
- In case of possible mis-use by e.g. children, key-lock option is required or locate Call & Send control in safe position like a lockable cabinet.

NOTE

The stairlift will only move if it is switched on using the key switch (Extra/ Outdoor).

The armrest control unit (Joystick) has priority over the call-and-send controls (if the key is inserted in the key switch and the stairlift is switched on using the key switch).

The Standard option does not require a Key and in the case of this unit, the armrest control unit (Joystick) also has priority over the call-and-send controls.

3.2.1.2 ARMREST CONTROLS

17. Communication Module with call button (optional)
18. Call indicator lamp (optional)
19. Joystick
20. Emergency stop button

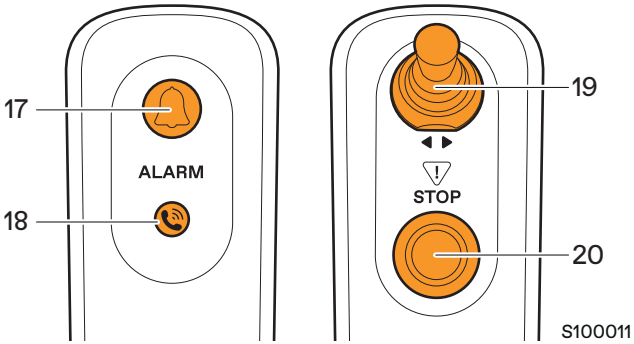

- The optional call button enables the chair-user to answer an incoming call or call for help.
- Pre-set phone numbers (max 3) are programmed during installation into the system.
- To answer a call a short press on the button is required.
- To make a call press and hold the button for 4 seconds.
- Ending a call, again press and hold the button for 4 seconds (see 4.4 for full details).
- Pressing the emergency stop button will stop any uncontrolled movement of the lift.

NOTE

The armrests have position detection and must be in the lowered position when operating the stairlift. Failure to follow this instruction will inhibit the operation of the stairlift.

3.2.2 CALL-AND-SEND CONTROLS

Use the call-and-park stations to move the stairlift while you are not seated in the chair. The call-and-park stations are located at the top and the bottom of the stairs. As an option, the call-and-park stations can also be located at intermediate floors with a parking point.

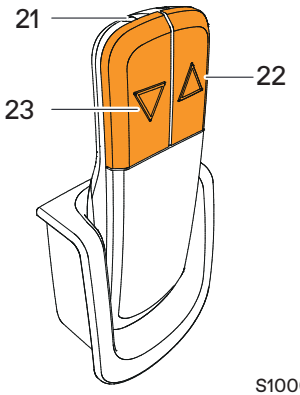

21. Call-and-send control

22. Ascend button

- Point the call-and-send control to the stairlift.
- Push and hold the button to raise the stairlift.
- After the stairlift stops, release the button.

23. Descend button

- Point the call-and-send control to the stairlift.
- Push and hold the button to lower the stairlift.
- After the stairlift stops, release the button.

NOTE

- The armrest control unit has priority over the call-and-send controls.
  HomeGlide Outdoor: Keep water and moist away from the call-and-send control.
  The call-and-send control is not waterproof.
- In order to use the keylock, the emergency stop button should not be activated.

3.2.3 KEY LOCK (COMFORT/OUTDOOR)

The key lock makes it possible to put the stairlift in and out of operation with a key, e.g. when the stairlift is installed in a public area or to prevent children from playing with the stairlift. In order to use the keylock, the emergency stop button should not be activated.

Using key lock

The keylock is an On/Off switch. The key must be removed after use.

1. Insert the key.
2. Turn the key clockwise to unlock the stairlift.

NOTE

When operated, the key lock switches ON the stairlift.

CAUTION

When the keylock is locked, the lift cannot be operated via the call-and park control station.

3.2.4 4-POINT SAFETY BELT (OPTIONAL)

When using the 4-point safety belt for the first time, please follow these steps. After the initial adjustment of the straps, it is only necessary to loosen and tighten the shoulder straps to use the safety belt. An attendant is required to help to fasten the safety belt and make the adjustments.

First use of the 4-point safety belt

1. Loosen all adjustable straps.
2. Sit down on the seat.
3. Move the shoulder straps over the shoulders.
4. Adjust the back strap until the cross point is on a comfortable place on the back and the belt fits naturally over the shoulders.
5. Fasten the 4-point safety belt.
6. Adjust the belt parts on the front side by pulling the straps until they are tight, but comfortable.
7. Adjust the shoulder parts by pulling the straps.

WARNING

Make sure that no loose ends can interfere with any moving parts.

8. Also fasten the standard safety belt (see 4.3 for more information).
9. Now you can use the stairlift.

Remove the 4-point safety belt

1. Release the standard safety belt and the 4-point safety belt.
2. If necessary, loosen the shoulder straps.
3. Take off the 4-point safety belt.
4. When the chair is not in use, fold the seat and fold in the armrests.

CAUTION

Make sure that no loose ends can interfere with any moving parts in case that the stairlift will be moved by the Call-and-park control station.

Regular use of the 4-point safety belt

1. Sit down on the seat.
2. Move the shoulder straps over the shoulders.
3. Fasten the 4-point safety belt.
4. Adjust the shoulder straps and make sure that no loose ends can interfere with any moving parts.
5. Also fasten the standard safety belt (see 4.3 for more information).
6. Now you can use the stairlift.

3.2.5 MAIN SWITCH

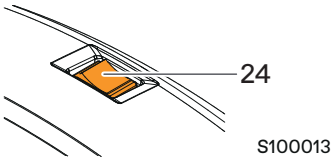

24. Main switch

During normal use the main switch should be always in the ON position.

- Set the main switch to the off position to switch off the stairlift.
- Set the main switch to the on position to switch on the stairlift.

CAUTION

Use only the main switch to switch the stairlift on or off. Do not remove the mains plug from the wall socket.

3.3 SWIVEL SEAT

3.3.1 MANUAL SWIVEL SEAT (HOMEGLIDE CLASSIC / HOMEGLIDE OUTDOOR)

Before you sit down or stand up, you can turn the chair to face the landing at the top floor level. With the manual swivel seat, you can turn the chair 70° while the stairlift is at a landing. You cannot move the stairlift until the chair is back into the ride position (i.e. at a 90° angle with the stairs).

WARNING

Before you sit down or stand up, lock the swivel seat.

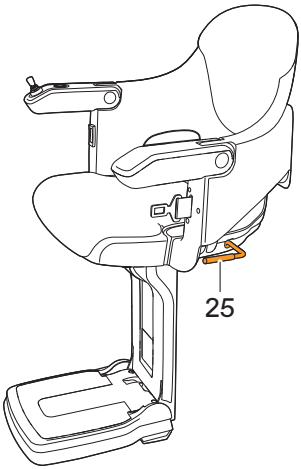

S100014

25. Manual swivel seat (Classic and Outdoor)

- Pull up the handle to unlock the seat.
- Turn the seat to face the landing at the top floor level.
- Release the handle to lock the seat.

3.3.2 AUTOMATIC SWIVEL SEAT (HOMEGLIDE EXTRA)

The stairlift is equipped with an automatic swivel seat. Before you sit down or stand up, the chair will turn automatically to face the landing at the top floor level. The chair will also turn back automatically to face the stairs. The stairlift will not move until the chair is back into the ride position (i.e. at a 90° angle with the stairs).

3.3.3 LINKED AUTOMATIC FOLDING FOOT REST (HOMEGLIDE EXTRA)

The HomeGlide Extra is equipped with a linked footrest wich is unfolding and folding when unfolding and folding the manual folding seat.

WARNING

In the event of a defect in the automatic swivel where access to the stairs is obstructed: call service as soon as possible.

3.4 OPTIONAL FEATURES

3.4.1 HINGED RAIL (HOMEGLIDE CLASSIC / HOMEGLIDE EXTRA)

The hinged rail is a section of the rail at the bottom of the staircase that will automatically lower and raise when the stairlift is operated. The hinged rail is a useful feature in situations where there is an obstruction (doorways) or where the protrusion of the foot of the rail can cause a tripping hazard (passageways). The hinged rail comes together with an extra parking point.

WARNING

Before you use the stairlift, make sure that the area around the hinged rail is free of obstacles.

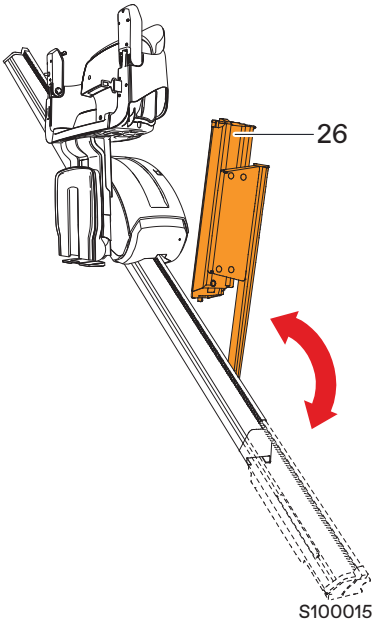

26. Hinged rail

- Push and hold the joystick to the left or to the right to move the stairlift.
- If the stairlift reaches the extra parking point, it will come to a momentary standstill.
- Keep the joystick pushed until the hinged rail is fully raised or lowered. The stairlift will start moving again automatically.

3.4.2 EXTRA PARKING POINT

The stairlift can be equipped with an extra parking point. If the stairlift reaches the extra parking point, it will come to a momentary standstill. Keep the joystick pushed until the stairlift starts moving again automatically.

3.4.3 RAIN COVER (HOMEGLIDE OUTDOOR)

The rain cover keeps off leaves and other garden debris and provides additional protection against the elements (rain, hail, snow, etc.). Put the rain cover over the stairlift when not used.

4 USE

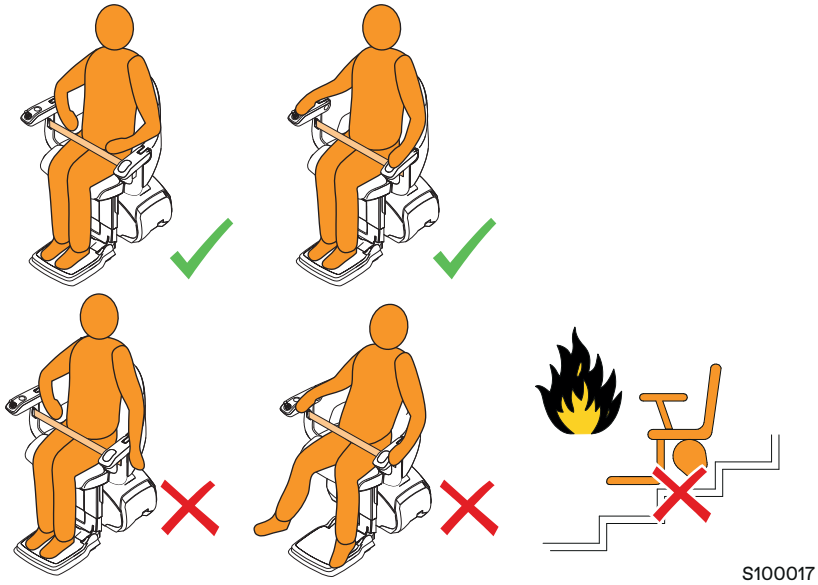

WARNING

In case an attendant is operating the stairlift, the attendant should take care not to be entrapped between chair/chairleg/drive.

4.1 UNFOLDING THE SEAT AND SITTING DOWN

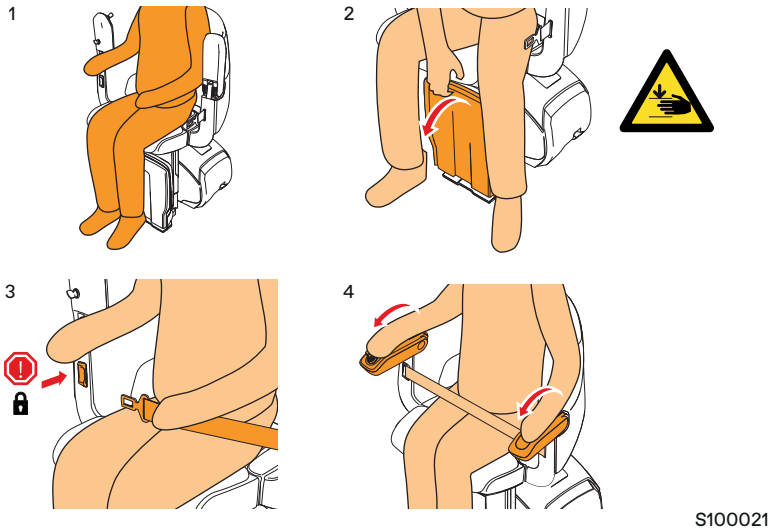

4.2 TRAVELLING WITH THE STAIRLIFT

1. Engauge safety belt, stairlift will not operate until this action has been performed.
2. Set armrests to operating position.
3. Push and hold the joystick on the armrest control unit to the left or to the right to move the stairlift. Refer to chapter 6 “Signals”.

NOTE

If you release the joystick, the stairlift will stop immediately. You can start the stairlift again only after a short delay.

4. The stairlift will stop at all parking points. If you hold the joystick to the left or to the right, the stairlift will start moving again automatically.
5. Release the joystick to stop the stairlift.

4.3 EMERGENCY STOP

WARNING

Do not get off the stairlift on the stairs, not even in case of a breakdown, but use the Communication Module / Call Device to call for help.

Only get off the stairlift at floor positions.

- To stop the stairlift in the case of an emergency, press the emergency stop button located just below the joystick.
- The stairlift can be operated again after the emergency stop button is pressed again.

4.4 COMMUNICATION MODULE (OPTIONAL)

The Communication Module (CM) is an optional function. This option makes it possible to communicate via a landline with up to three pre-programmed telephone numbers, for example in case of an emergency.

Incoming calls can also be accepted.

4.4.1 MAKING A CALL

1. Press the yellow alarm button for 4 to 7 seconds. The dialling tone can now be heard.
2. Release the call button. The light on the alarm button has now turned green.
3. If the contact answers, you can communicate by speaking in the direction of the alarm button.

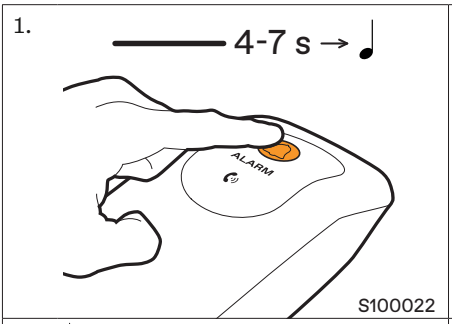

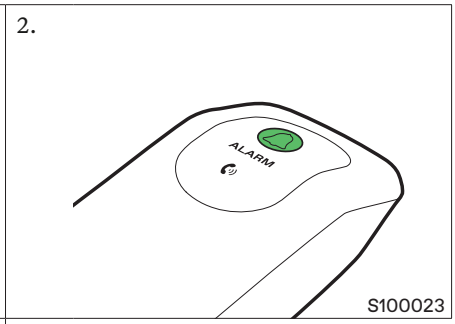

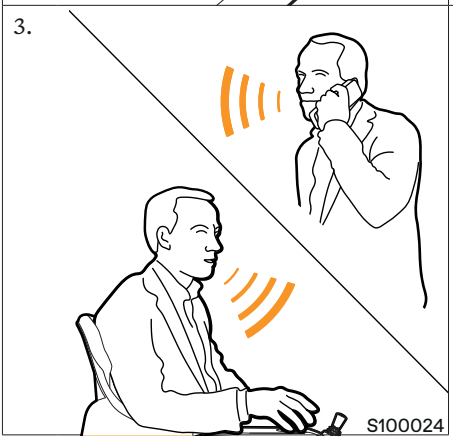

4.4.2 DISCONNECTING

1. Press the yellow alarm button for 4 to 7 seconds. The light on the call button turns off.

The call has now ended. It is also possible for the person being called to hang up.

4.4.3 CHOOSING THE NEXT NUMBER

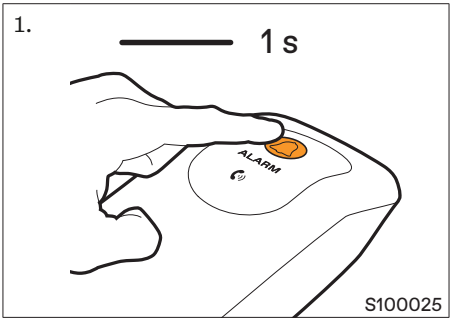

If the connection to the first contact fails, you can choose to go to the next pre-programmed number. This is done as follows:

1. During the call, press the yellow alarm button once briefly. The next number will now be dialled.

NOTE

If the contact's number redirects to voice mail, you must also briefly press the yellow alarm button once to call the next number.

4.4.4 ACCEPTING INCOMING CALLS

The landline is connected to the Communication Module. An incoming call can therefore also be accepted while using the stairlift.

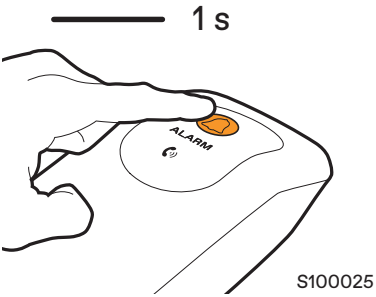

When there is an incoming call, the Communication Module produces a ring tone. Accepting the call is done as follows:

1. Briefly press the yellow alarm button once. The connection is now established. Speak in the direction of the alarm button to communicate.
   The call can be ended by pressing the yellow alarm button for 1 second.

Led behaviour	Mooe	Sound	Cause
Off	Registered to a base station	None	Standby mode
Flashing red	Unregistered to a base station	None	Module is not registered to a base station
Flashing red	Registered to a base station	Single beep every 20 seconds	Module cannot find the base station it is registered to (either because it is out of range or because the base station has been disconnected)
Constant green	Registered to a base station	Dialing tone	Trying to establish a call
Flashing green	Registered to a base station	Busy tone	The far-end caller has disconnected the call
Constant green (after initiating a call attempt)	Registered to a base station	None	There is no telephone line connected to the base station

NOTE

It is recommendable to check the working of the Call device by making a call at a regular base.

When the call device is not working properly please contact a local authorized service organisation.

4.5 STANDING UP AND FOLDING THE SEAT

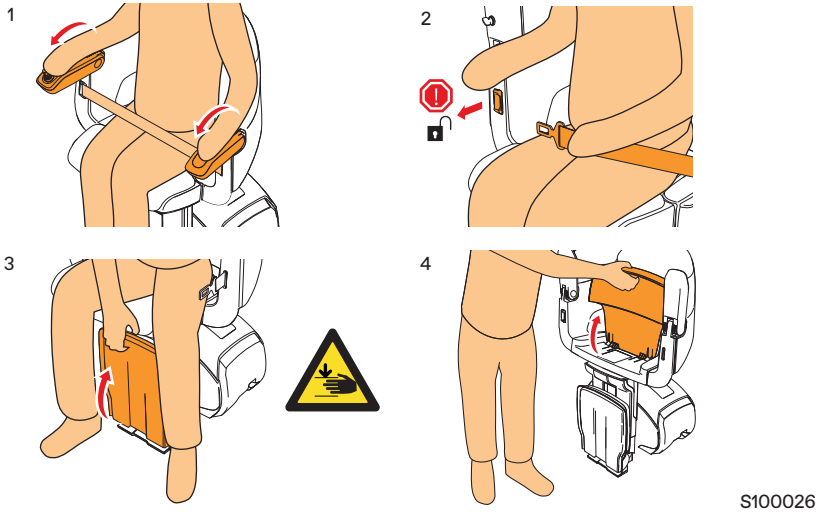

5 MAINTENANCE

5.1 CLEANING THE STAIRLIFT

WARNING

Be aware of sharp edges while cleaning the stairlift.

- Regularly clean the stairlift – seat, backrest, armrest, footrest, safety belt, motor housing – with a soft, damp cloth. If necessary, use a mild detergent.
- Keep the armrest control unit and the call-and-send controls free of dirt.
- Regularly remove dust from the stairs and the rail with a damp cloth.

5.2 REGULAR MAINTENANCE

To keep your stairlift in the best condition, it is strongly recommended that it is annually serviced by an authorized service company.

During service, the following items will be inspected and tested:

- Safety functions (safety belt etc.)
- Moving parts (armrest hinges, folding of seat etc.)
- Electronics (batteries, cabling etc.)
- Drive (covers, motor etc.)
- Rail (fixations, grease etc.)

An authorized technician is in possession of the complete service checklist.

5.3 REPLACING THE BATTERIES OF THE CALL-AND-SEND CONTROLS

The call-and-send controls use 2 AA batteries. After approximately 12 months, replace the batteries.

1. Open the cover of the battery compartment.
2. Replace the batteries.
3. Close the cover of the battery compartment.

NOTE

After you replace the batteries, purchase new spare batteries as soon as possible.

6 SIGNALS

6.1 SIGNALS ON ARMREST CONTROL UNIT

Signal	Meaning	Action
Fast intermittent beeps	The stairlift has encountered an obstacle and has stopped.	Move the stairlift in the opposite direction to a parking point. Before you use the stairlift, make sure that the stairs are free of obstacles.
	The batteries are low.	Move the stairlift in the downwards direction to a parking point. Before you use the stairlift, make sure that the batteries are at least charged for a couple of hours.
2-tone beeps during 3 seconds, repeated every 10 seconds	The stairlift is not on a charging point.	Move the stairlift to a charging point.
1 beep for 2 seconds	The stairlift starts moving.	-
3 beeps for 2 seconds	The stairlift arrives at a landing.	-
1 beep for 0.5 second, repeated every second + 3-tone end beep	The automatic swivel seat is in motion.	-
1 beep for 0.5 second, repeated every second	The hinged rail is in motion.	-

7 TECHNICAL DATA

Maximum permitted weight	160 kg @ max 45 ° rail - indoor only
	136 kg @ max 53 ° rail
Driving speed (nominal)	0.12 m/s (23.6 ft/min)
Sound pressure level	67 dB(A)

Electrical system			
Indoor	Input voltage	100 - 240	VAC
	Frequency	50/60	Hz
	Output voltage	36	VDC
	Output current	1000	mA
	USA / Canada		
	Input voltage	120	VAC
	Frequency	60	Hz
	Output voltage	24 VAC / 36 VDC	
	Output current	1000	mA
Outdoor	**United Kingdom**		
	Input voltage	240	VAC
	Frequency	50	Hz
	Output voltage	6	VAC
	Output current	4000	mA
	Europe		
	Input voltage	230	VAC
	Frequency	50	Hz
	Output voltage	6	VAC
	Output current	4000	mA
	USA / Canada		
	Input voltage	120	VAC
	Frequency	60	Hz
	Output voltage	6	VAC
	Output current	4000	mA
	Japan		
	Input voltage	100	VAC
	Frequency	50/60	Hz
	Output voltage	6	VAC
	Output current	4000	mA

Environmental conditions	
Ambient temperature	Indoor: 5 - 40 °C (41 - 104 °F) Outdoor: -10 - 50 °C (14 - 140 °F)
Relative humidity	Indoor: 20 - 80% Outdoor: 0 - 100%

Batteries (stairlift)	
Battery type	12V 7Ah
Number of batteries	2
Charging time	16 hours
Capacity	10 journeys (125 kg (275 lbs), 1 floor height)

Batteries (call-and-send control)	
Battery type	AA: 1.5 V
Number of batteries	2

8 CONTACT

For information which is not in the manual, contact your dealer.

Phone number:

To support you as quickly as possible, please have the below details available when you contact our service department staff:

Name of user: .....

Phone number: .....

Installation number: .....

Type of stairlift: .....

Description of the problem:

.....

.....

.....

Manufacturer

TK Home Solutions B.V.
Van Utrechtweg 99, 2921 LN
P.O. Box 754, 2920 CB
Krimpen aan den IJssel (The Netherlands)

Phone: +31 (0)180 530 900
E-mail: info.tkhomesolutionsbv@tkelevator.com
lnternet: www.tkelevator.com

1156713